JACKETED BALL VALVE

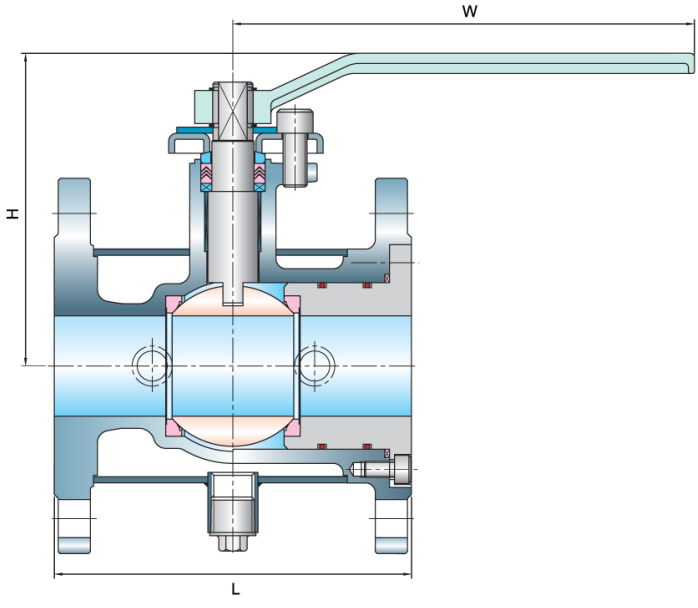

SPECIFICATIONS

- One piece body
- Full bore
- Flanged ends
- Floating ball

OPERATION

- Hand lever
- Worm gear
- Pneumatic
- Electric

UNIT : mm

CLASS	NPS	½"X1½"	¾"X1½"	1" X 2"	1½"X2½"	2" X 3"	2½" X 4"	3" X 5"	4" X 6"	6" X 8"	8" X 10"
10Kgf/cm² & 150LBS	L	108	117	127	165	178	190	203	229	394	457
	H	121	122	132	150	156	167	201	218	272	280
	W	130	130	160	230	230	230	330	330	450	450
20Kgf/cm² & 300LBS	L	140	152	165	190	216	241	283	305	403	502
	H	121	122	132	150	156	167	201	218	272	280
	W	130	130	160	230	230	230	330	330	450	450

TANK BOTTOM BALL VALVE

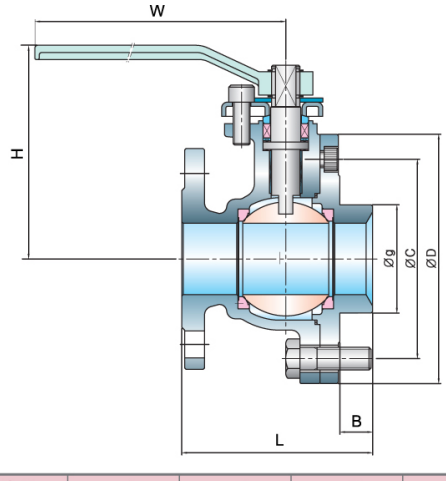

UNIT : mm

CLASS NPS	in	1"	1½"	2"	2½"	3"	4"	5"	6"	8"
	mm	25A	40A	50A	65A	80A	100A	125A	150A	200A
10Kgf/cm² & 150LBS	L	94	125	133	130	179	166	253	273	325
	B	15	21	23	23	18	40	42	42	50
	g	49	60	76	114	110	166	192	243	321
	W	160	230	230	230	330	330	450	450	450
	H	117.5	129.5	136	140	161	190	224	265	302
	D	-	-	-	-	-	-	305	350	440
	C	-	-	-	-	-	-	265	310	400