CAST CARBON STAINLESS STEEL / BOLTED COVER

SWING CHECK VALVES

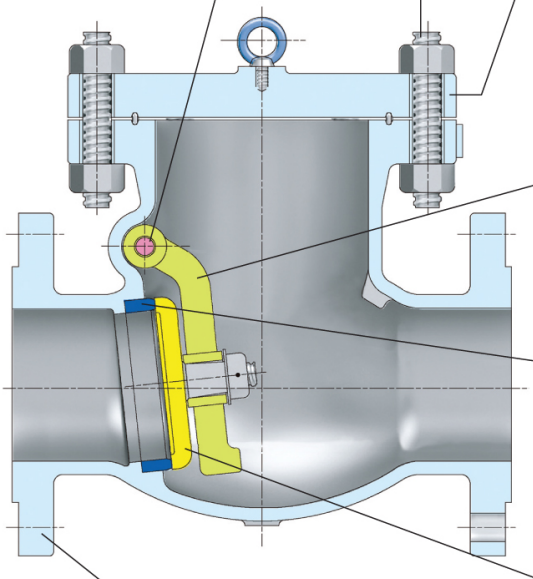

BOLTING

The body-cover bolting conforms with ANSI B 1.1
The nuts are manufactured to conform ANSI B 18.2.2

COVER

The cover material is identical to the body.
Depending on the valve size and pressure class, either a casting or a forging is used.

HINGE PIN

The hinge pin is inserted into the valve and held in position by plug.
The larger size valves are provided with bolted flanges instead of plugs.

ARM

The arm material is identical to the body.
Hinge bushing is provided in the larger valve sizes to minimize friction and eliminate seizing.

SEAT RING

The bottom seated type seat ring is screwed into body.
The seating surface is finished by lapping. The forged seat ring is heat-treated to deliver the best mechanical properties and required hardness.

DISC

The disc has a sufficient seating surface area which is ground and lapped to a mirror finish. It is of one-piece construction and is heat treated to deliver the required mechanical properties and hardness.

BODY

The cast steel body is designed with a wall thickness which is greater at any point than the minimum requirement provided by API Std. 600 or API6D. Port and seat passage dimensions conform to ANSI B 16.5 Pipe Fitting. The welded-in type seat ring is standard to allow interchangeability. The standard body-bonnet joint is male -female, and the flange is round for all valves.

CAST CARBON STEEL / BOLTED COVER

SWING CHECK VALVES

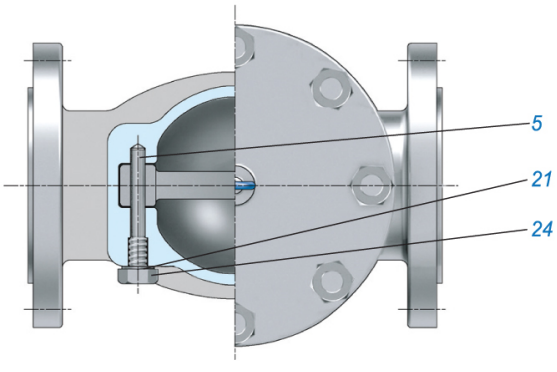

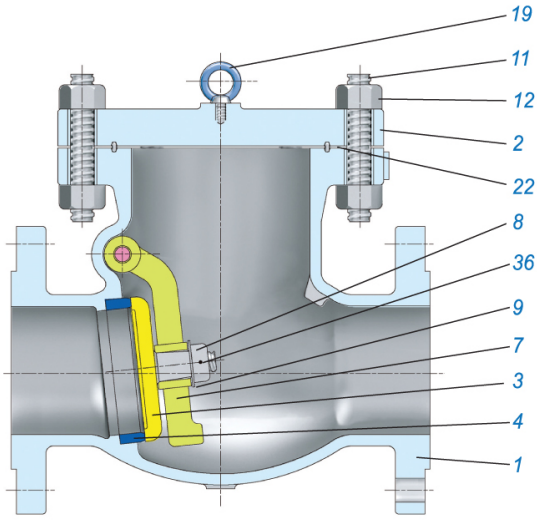

No.	NAME OF PART	ASTM SPECIFICATION
8	DISC NUT	AISI 304
9	DISC WASHER	AISI 304
19	EYE BOLT(6"&OVER)	A307.B
21	PLUG GASKET	A307.B
22	GASKET	SEE PAGE 44
24	PLUG	A307.B
36	SPLIT PIN	AISI 304

No.	NAME OF PART	ASTM SPECIFICATION						KS SPECIFICATION
		STANDARD	HIGH TEMPERATURE SERVICE				LOW TEMPERATURE SERVICE	STANDARD
1	BODY	A216-WCB	A217-WC1	A217-WC6	A217-WC9	A217-C5	A352-LCB	SCPH2
2	COVER	A216-WCB	A217-WC1	A217-WC6	A217-WC9	A217-C5	A352-LCB	SCPH2
3	*DISC	A217-CA15	A217-WC1	A217-WC6	A217-WC9	A217-C5	A352-LCB	SSC1
4	BODY SEAT RING	C/S1020+HF	A182-F1	A182-F11	A182-F22	A182-F5a	A182-F304	STEEL+HF
5	HINGE PIN	A276-410	A276-410	A276-410	A276-410	A276-410	A276-304	STS410
7	ARM	A216-WCB	A216-WC1	A216-WC6	A216-WC9	A217-C5	A352-LCB	SCPH2
11	COVER BOLT	A193-B7	A193-B7	A193-B16	A193-B16	A193-B16	A320-L7	SNB7
12	COVER NUT	A194-2H	A194-2H	A194-4	A194-4	A194-4	A194-4	SM45C

*DISC : In case of 12" and larger size, we'll use trim material overlayed one on the same or equivalent material of the Body

CAST STAINLESS STEEL / BOLTED COVER

SWING CHECK VALVES

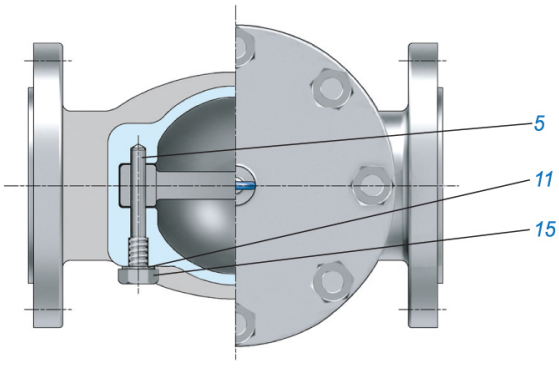

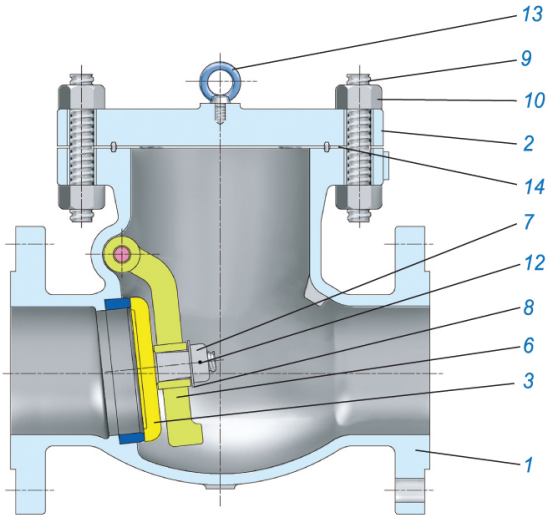

No.	NAME OF PART	ASTM SPECIFICATION CORROSION SERVICE				REMARKS
1	BODY	A351-CF8	A351-CF8M	A351-CF3	A351-CF3M	
2	COVER	A351-CF8	A351-CF8M	A351-CF3	A351-CF3M	
3	DISC	A351-CF8	A351-CF8M	A351-CF3	A351-CF3M	
5	HINGE PIN	A276-304	A276-316	A276-304L	A276-316L	
6	ARM	A351-CF8	A351-CF8M	A351-CF3	A351-CF3M	
7	DISC NUT	A194-8	A194-8M	A194-8M	A194-8M	
8	WASHER	A240-304	A240-316	A240-304L	A240-316L	
9	COVER BOLT	A193-B8	A193-B8	A193-B8	A193-B8	
10	COVER NUT	A194-8	A194-8	A194-8	A194-8	
11	PLUG GASKET	COMMERCIAL	COMMERCIAL	COMMERCIAL	COMMERCIAL	
12	SPLIT PIN	A580-304	A580-304	A580-304	A580-304	
13	EYE BOLT(6"&OVER)	A307-B	A307-B	A307-B	A307-B	
14	GASKET	COMMERCIAL	COMMERCIAL	COMMERCIAL	COMMERCIAL	NOTE1
15	PLUG	A276-304	A276-316	A276-304L	A276-316L	

*Note1. Gasket material : customer's requirements, see page 44

CAST STEEL / BOLTED COVER

ASME CLASS 150LB

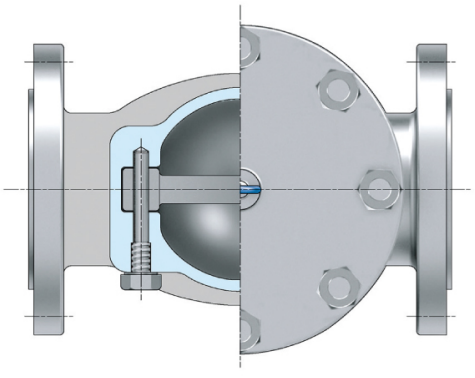

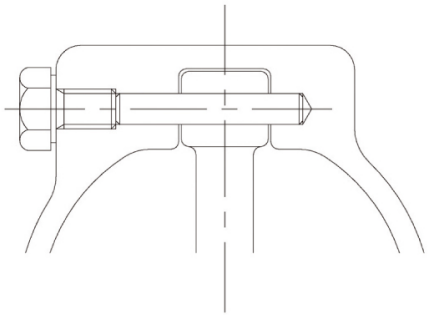

ALL SIZE

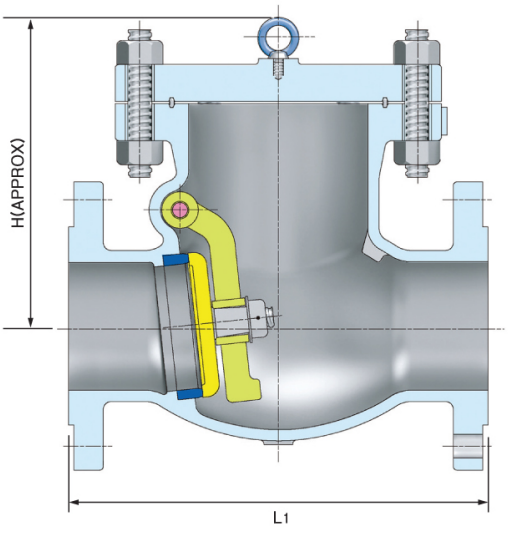

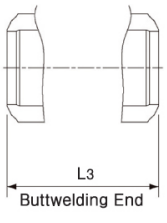

VALVE SIZE	inch	2	2 1/2	3	4	5	6	8	10	12	14	16	18	20	24	28	30
	mm	50	65	80	100	125	150	200	250	300	350	400	450	500	600	700	750
L1 & L3	inch	8.0	8.5	9.5	11.5	13.0	14.0	19.5	24.5	27.5	31.0	34.0	38.5	38.5	51.0	57.0	60.0
	mm	203	216	241	292	330	356	495	622	699	787	864	978	978	1295	1448	1524
H	inch	6.1	6.7	7.3	7.9	9.3	10.0	12.0	13.6	15.0	18.1	21.5	25.6	26.4	35.4	40.0	45.2
	mm	155	170	185	200	235	255	305	345	380	460	545	650	670	900	1016	1149
WEIGHT	LB	33.1	48.5	59.5	90.4	143.3	176.4	313.1	390.3	639.5	862.2	1016.5	1411.2	1719.9	3285.5	4520.3	6392.3
	Kg	15	22	27	41	65	80	142	177	290	391	461	640	780	1490	2050	2899

CAST STEEL / BOLTED COVER

ASME CLASS 300LB

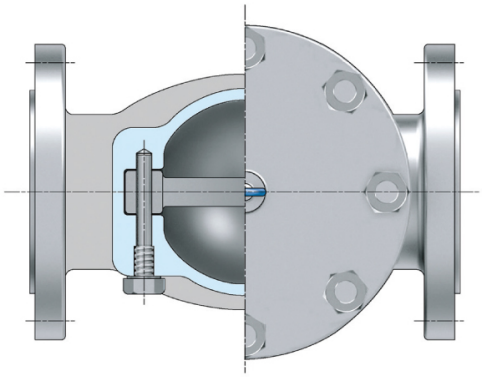

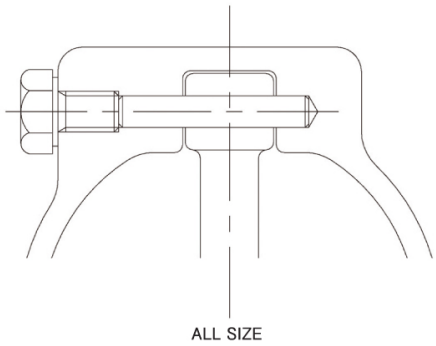

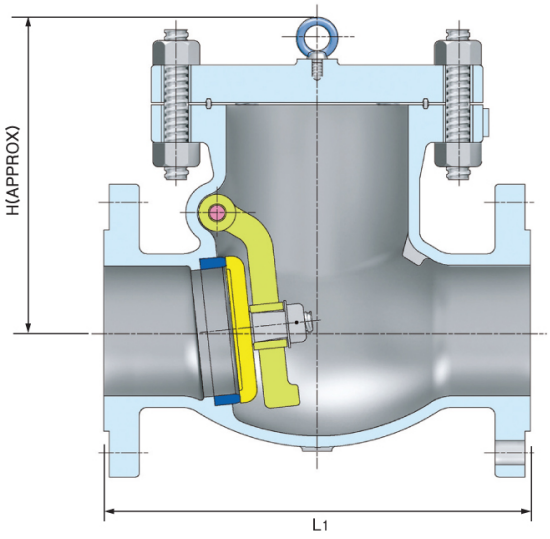

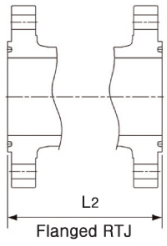

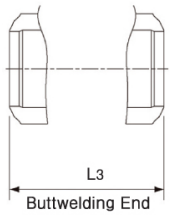

VALVE SIZE	inch	2	2 1/2	3	4	5	6	8	10	12	14	16	18	20	24	28
	mm	50	65	80	100	125	150	200	250	300	350	400	450	500	600	700
L1 & L3	inch	10.5	11.5	12.5	14.0	15.75	17.5	21.0	24.5	28.0	33.0	34.0	38.5	40.0	53.0	59.0
	mm	267	292	318	356	400	444	533	622	711	838	864	978	1016	1346	1499
L2	inch	11.12	12.12	13.12	14.62	16.38	18.12	21.62	25.12	28.62	33.62	34.62	39.12	40.75	53.88	60.0
	mm	283	308	333	371	416	460	549	638	727	854	880	994	1035	1369	1524
H	inch	6.9	7.5	8.1	8.7	11.6	12.8	14.5	18.6	20.9	22.8	27.4	31.4	30.6	39.6	45.2
	mm	175	190	205	220	295	326	368	473	530	580	695	797	776	1007	1149
WEIGHT	LB	41.9	66.2	77.2	119.1	198.5	282.4	463.1	590.9	915	1503.8	1647.1	2756.3	3307.5	4917.2	6504.8
	Kg	19	30	35	54	90	128	210	268	415	682	747	1250	1500	2230	2950

CAST STEEL / BOLTED COVER

ASME CLASS 600LB

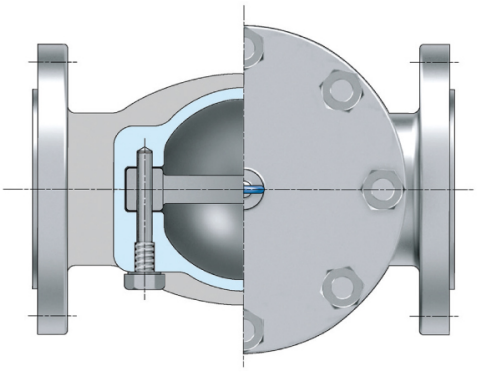

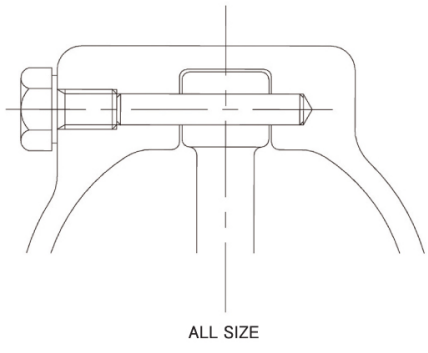

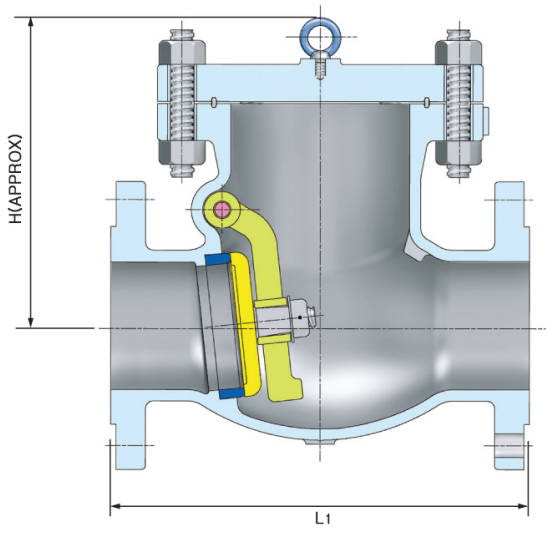

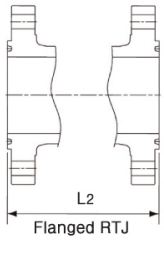

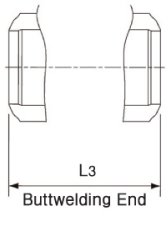

VALVE SIZE	inch	2	2 1/2	3	4	5	6	8	10	12	14	16	18	20	24
	mm	50	65	80	100	125	150	200	250	300	350	400	450	500	600
L1 & L3	inch	11.5	13.0	14.0	17.0	20.0	22.0	26.0	31.0	33.0	35.0	39.0	43.0	47.0	55.0
	mm	292	330	356	432	508	559	660	787	838	889	991	1092	1194	1397
L2	inch	11.62	13.12	14.12	17.12	20.12	22.12	26.12	31.12	33.12	35.12	39.12	43.12	47.25	55.38
	mm	295	333	359	435	511	562	664	791	841	892	994	1095	1200	1407
H	inch	7.5	8.3	9.6	11.8	13.3	15.7	16.9	20.7	24.2	27.6	32.0	37.8	40.5	457.3
	mm	190	210	235	300	337	400	430	525	615	700	812	960	1029	1202
WEIGHT	LB	77.2	119.1	141.1	229.3	330.8	449.8	793.8	1367.1	1775.0	2306.4	2976.8	4454.1	5269.9	7717.5
	Kg	35	54	64	104	150	204	360	620	805	1046	1350	2020	2390	3500

CAST STEEL / BOLTED COVER

ASME CLASS 900LB

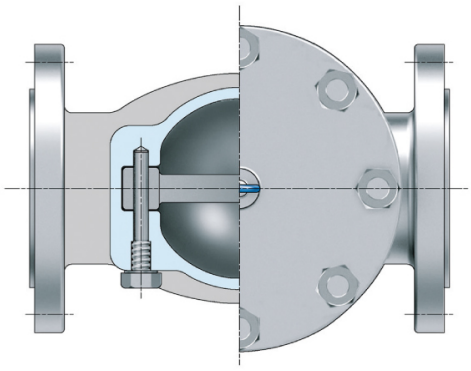

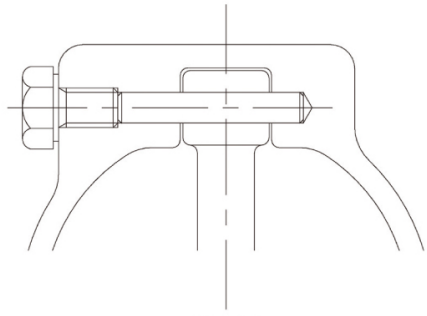

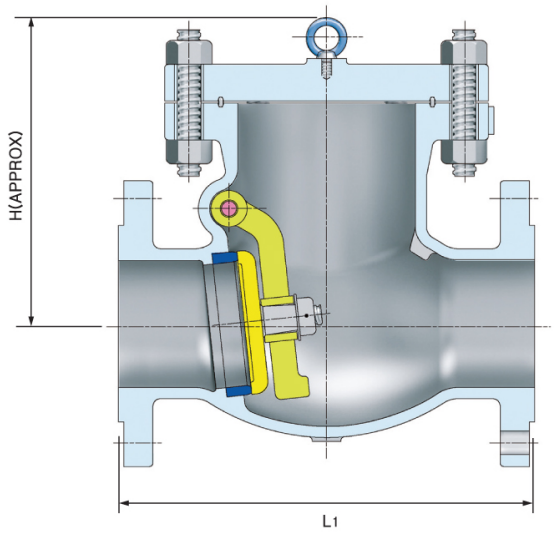

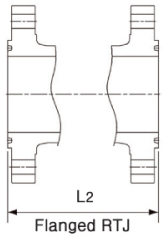

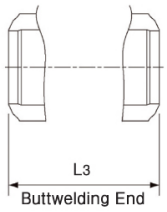

VALVE SIZE	inch	2	2 1/2	3	4	5	6	8	10	12	14	16
	mm	50	65	80	100	125	150	200	250	300	350	400
L1 & L3	inch	14.5	16.5	15.0	18.0	22.0	24.0	29.0	33.0	38.0	40.5	44.5
	mm	368	419	381	457	559	610	737	838	965	1029	1130
L2	inch	14.62	16.62	15.12	18.12	22.13	24.12	29.12	33.12	38.12	40.88	44.88
	mm	371	422	384	460	562	613	740	841	968	1038	1140
H	inch	13.1	13.7	12.6	16.7	17.4	18.9	22.2	28.3	30.7	31.8	33.0
	mm	333	349	321	423	441	479	565	721	781	807	838
WEIGHT	LB	154.4	242.6	242.6	471.4	735.6	837.9	1375.9	2535.8	3197.3	3858.8	5336.1
	Kg	70	110	110	214	320	380	624	1150	1450	1750	2420

CAST STEEL / BOLTED COVER

ASME CLASS 1500LB

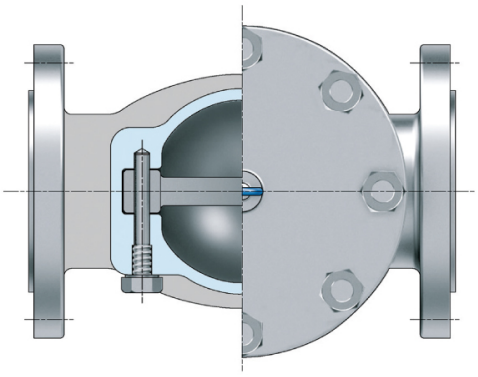

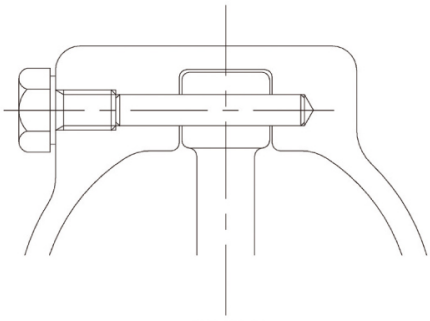

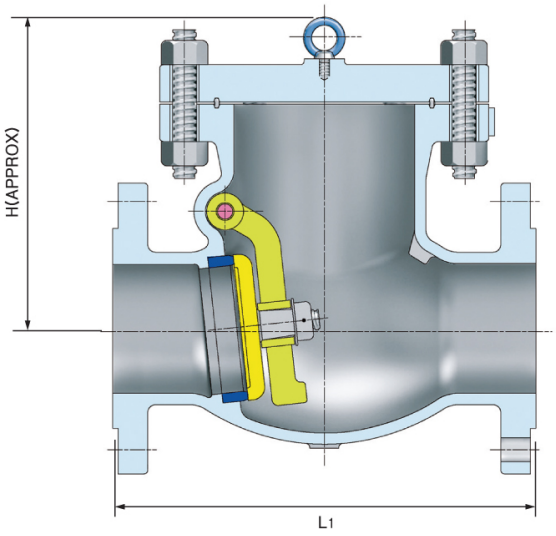

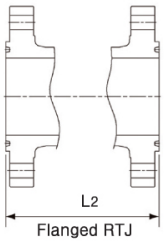

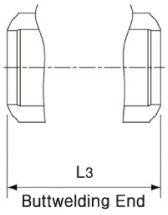

VALVE SIZE	inch	2	2 1/2	3	4	5	6	8	10	12	14
	mm	50	65	80	100	125	150	200	250	300	350
L1 & L3	inch	14.5	16.5	18.5	21.5	26.5	27.75	32.75	39.0	44.5	49.5
	mm	368	419	470	546	673	705	832	991	1130	1257
L2	inch	14.62	16.62	18.62	21.62	26.61	28.0	33.13	39.38	45.12	50.25
	mm	371	422	473	549	676	711	842	1000	1146	1276
H	inch	13.1	13.7	15.3	16.5	18.9	23.1	26.8	29.8	39.7	40.8
	mm	333	349	389	419	479	587	680	756	1008	1035
WEIGHT	LB	154.4	242.6	374.9	661.5	1036.4	1532.5	2624.0	4079.3	7342.7	7938
	Kg	70	110	170	300	470	695	1190	1850	3330	3600

CAST STEEL / PRESSURE SEAL COVER

SWING CHECK VALVES

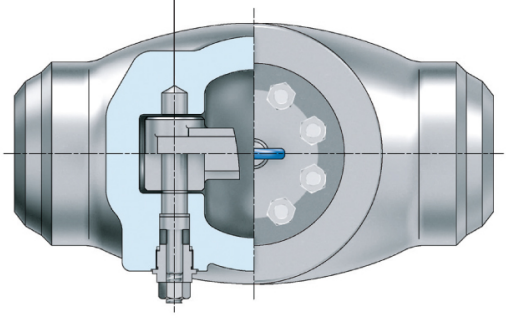

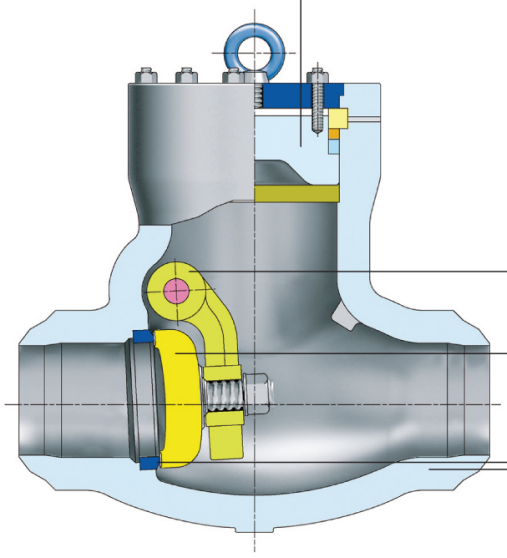

HINGE PIN

The hinge pin is inserted into the valve body to achieve pressure seal construction.

COVER

The cover material is a steel forging identical to the body to insure high dependability.
The cover construction has a perfect body-cover tightness and ease of dismantling and reassembly are ensured.

ARM

The arm is of a steel material identical to the body.
Larger sizes valves are provided with a hinge bushing to reduce friction and to prevent galling.

DISC

The disc has a sufficient seating surface area which is ground and lapped to a mirror finish.
It is of one-piece construction and is heat treated to deliver the required mechanical properties and hardness.

SEAT RING

The Stellite 6 surface of the seat ring is integrally applied to the body. by means of welding in all valve sizes.
Perfect mating with the DISC surfaces attained by a lapping finish applied to the seating.

BODY

The cylindrically shaped valve body prevents distortion or undue stress under extreme working conditions. Padding is also provided to achieve a sound cast structure in the critical areas.
The wall thickness is greater than, or in accordance with, API, ANSI and ASME requirements. The area contacting the pressure seal gasket has a stainless steel 18/8 inlay to eliminate corrosion or wire drawing. The close tolerances of the inside diameter of this area attained by accurate machining and honing finish.

CAST STEEL / PRESSURE SEAL COVER

SWING CHECK VALVES

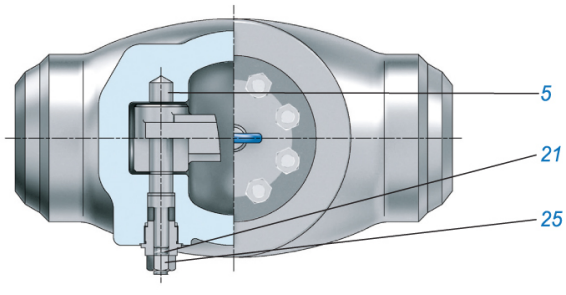

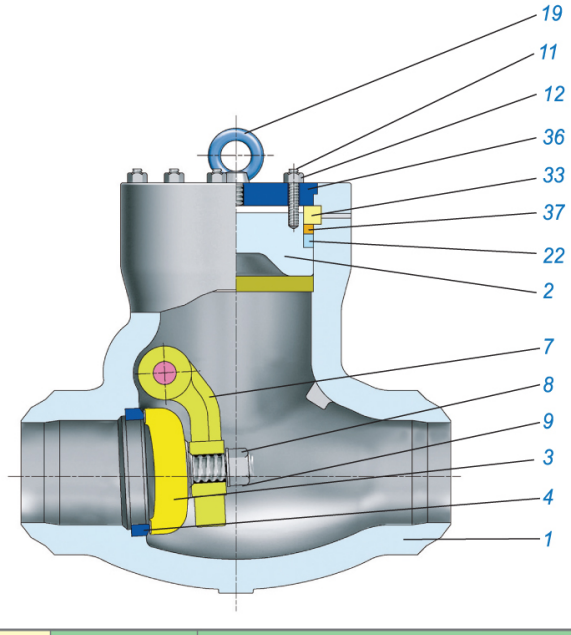

No.	NAME OF PART	ASTM SPECIFICATION
8	DISC NUT	A194-8
9	WASHER	A240-304
19	EYE BOLT	A307-B
21	PLUG GASKET	SEE PAGE 44
22	GASKET	SEE PAGE 44

No.	NAME OF PART	ASTM SPECIFICATION						KS SPECIFICATION
		STANDARD	HIGH TEMPERATURE SERVICE				LOW TEMPERATURE SERVICE	STANDARD
1	BODY	A216-WCB	A217-WC1	A217-WC6	A217-WC9	A217-C5	A352-LCB	A352-LC1/LC2/LC3
2	COVER	A216-WCB	A217-WC1	A217-WC6	A217-WC9	A217-C5	A352-LCB	A352-LC1/LC2/LC3
3	DISC	A216-WCB+HF	A217-WC1+HF	A217-WC6+HF	A217-WC9+HF	A217-C5	A352-LCB	A352-LC1/LC2/LC3
4	BODY SEAT TING	C/S1020+HF	A182-F1	A182-F11	A182-F22	A182-F5a	A182-F304	A182-F304
5	HINGE PIN	A276-410	A276-410	A276-410	A276-410	A276-410	A276-304	A276-304
7	ARM	A216-WCB	A217-WC1	A216-WC6	A217-WC9	A216-C5	A352-LCB	A352-LC1/LC2/LC3
11	BONNET BOLT	A193-B7	A193-B7	A193-B16	A193-B16	A193-B16	A320-L7	A320-L7
12	BONNET NUT	A194-2H	A194-2H	A194-4	A194-4	A194-4	A194-4	A194-4
25	PLUG	A276-410	A276-410	A276-410	A276-410	A276-410	A276-410	A276-410
33	RETAINER	A276-410	A276-410	A276-410	A276-410	A276-410	A276-304	A276-304
36	BONNET CLAMP	C/S1045	C/S1045	C/S1045	C/S1045	C/S1045	C/S1045	C/S1045
37	CASKET SPACER	A240-304	A240-304	A240-304	A240-304	A240-304	A240-304	A240-304

CAST STEEL / PRESSURE SEAL COVER

ASME CLASS 600LB

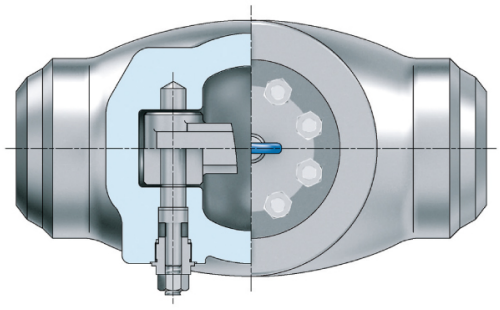

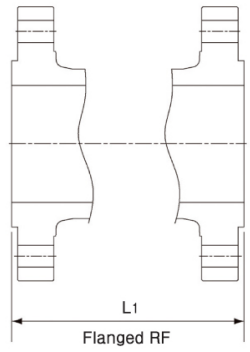

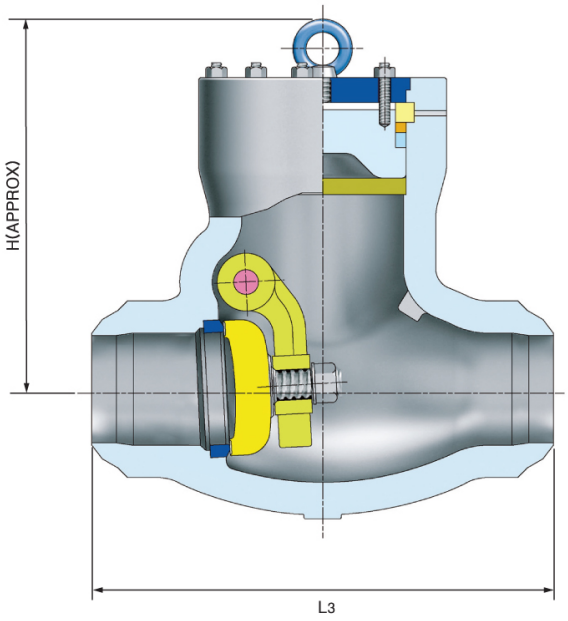

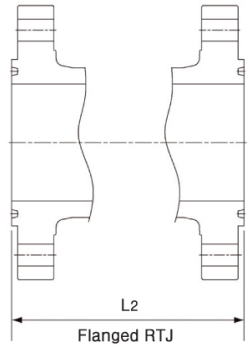

VALVE SIZE	inch	2	2 1/2	3	4	6	8	10	12	14	16	18	20	24
	mm	50	65	80	100	150	200	250	300	350	400	450	500	600
L3	inch	7.0	8.5	10.0	12.0	18.0	23.0	28.0	32.0	35.0	39.0	43.0	47.0	55.0
	mm	178	216	254	305	457	584	711	813	889	991	1092	1194	1397
L2	inch	11.62	13.12	14.12	17.12	22.12	26.12	31.12	33.12	35.12	39.12	43.12	47.25	55.38
	mm	295	333	359	435	562	664	791	841	892	994	1095	1200	1407
L1	inch	11.5	13.0	14.0	17.0	22.0	26.0	31.0	33.0	35.0	39.0	43.0	47.0	55.0
	mm	292	330	356	432	559	660	787	838	889	991	1092	1194	1397
H	inch	9.5	10.4	10.6	12.5	15.7	23.1	23.9	27.4	29.5	28.7	28.7	32.2	37.4
	mm	241	264	270	318	400	587	606	695	749	730	730	819	949
WEIGHT	LB	59.5	77.2	99.2	187.4	419.0	771.8	1102.5	1477.4	1940.4	2535.8	3263.4	4145.4	5733
	Kg	27	35	45	85	190	350	500	670	880	1150	1480	1880	2600

CAST STEEL / PRESSURE SEAL COVER

ASME CLASS 900LB

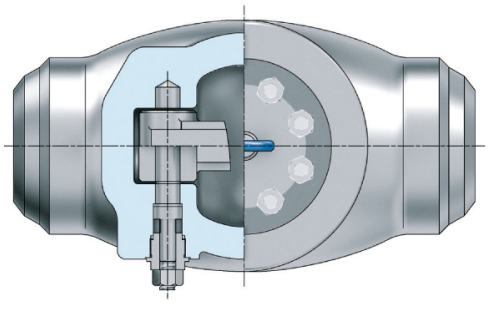

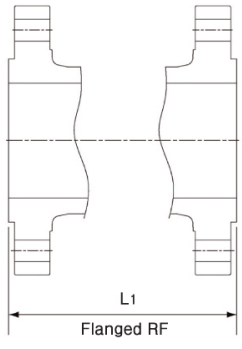

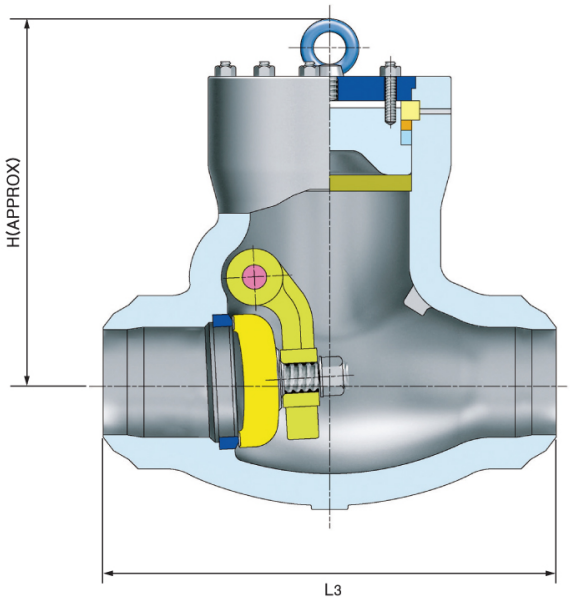

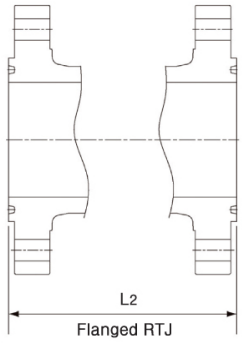

VALVE SIZE	inch	2	2 1/2	3	4	6	8	10	12	14	16
	mm	50	65	80	100	150	200	250	300	350	400
L3	inch	8.5	10.0	12.0	14.0	20.0	26.0	31.0	36.0	39.0	43.0
	mm	216	254	305	356	508	660	787	914	991	1092
L2	inch	14.62	16.62	15.12	18.12	24.12	29.12	33.12	38.12	40.88	44.88
	mm	371	422	384	460	613	740	841	968	1038	1140
L1	inch	14.5	16.5	15.0	18.0	24.0	29.0	33.0	38.0	40.5	44.5
	mm	368	419	381	457	610	737	838	965	1029	1130
H	inch	9.5	10.4	10.6	12.5	15.7	23.1	23.9	27.4	29.5	28.7
	mm	241	264	270	318	400	587	606	695	749	730
WEIGHT	LB	88.2	121.3	114.7	231.5	507.2	1256.9	1874.3	2866.5	3417.8	3638.3
	Kg	40	55	52	105	230	570	880	1300	1550	1650

CAST STEEL / PRESSURE SEAL COVER

ASME CLASS 1500LB

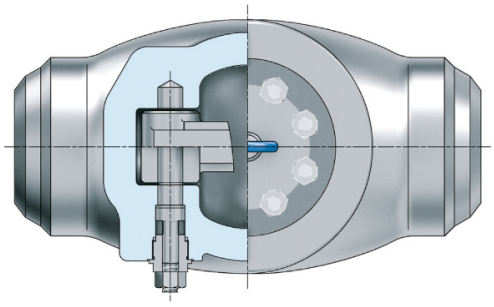

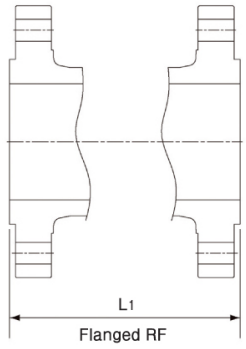

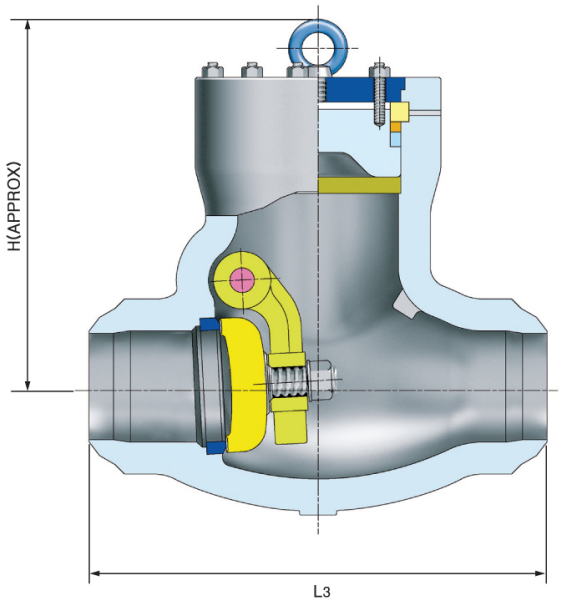

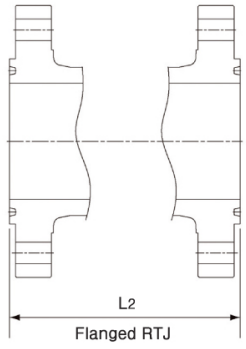

VALVE SIZE	inch	2	2 1/2	3	4	6	8	10	12	14
	mm	50	65	80	100	150	200	250	300	350
L3	inch	8.5	10.0	12.0	16.0	22.0	28.0	34.0	39.0	42.0
	mm	216	254	305	406	559	711	864	991	1067
L2	inch	14.62	16.62	18.62	21.62	28.0	33.13	39.38	45.12	50.25
	mm	371	422	473	549	711	842	1000	1146	49.5
L1	inch	14.5	16.5	18.5	21.5	27.75	32.75	39.0	44.5	1257
	mm	368	419	470	546	705	832	991	1130	1276
H	inch	9.5	10.4	10.6	12.5	15.7	18.9	23.3	25.4	28.0
	mm	241	264	270	318	400	479	591	645	711
WEIGHT	LB	88.2	121.3	220.5	308.7	882.0	1345.1	2315.3	3417.8	4630.5
	Kg	40	55	100	140	400	610	1050	1550	2100

CAST STEEL / PRESSURE SEAL COVER

ASME CLASS 2500LB

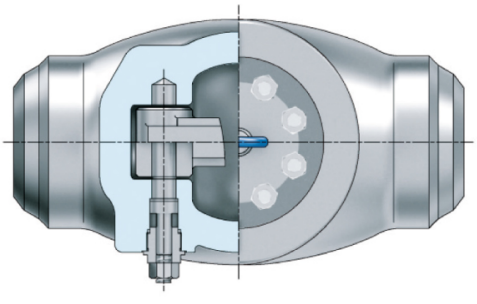

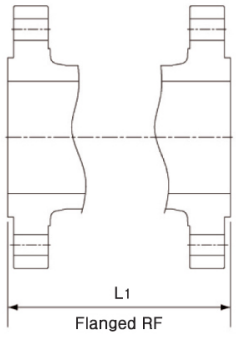

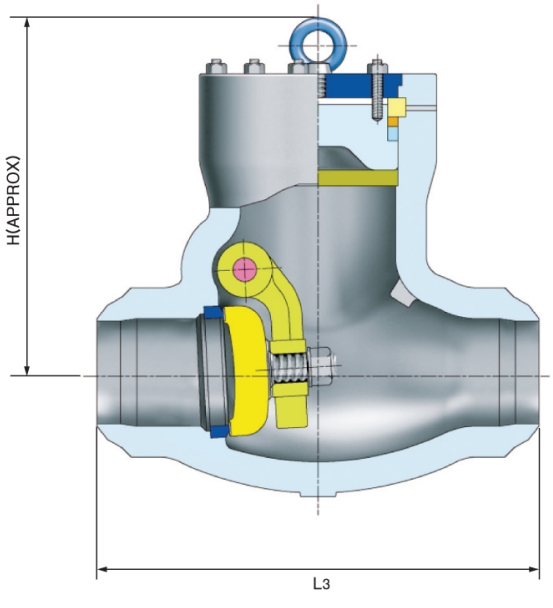

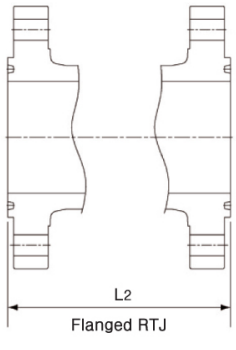

VALVE SIZE	inch	2	2 1/2	3	4	6	8	10	12	14	16	18
	mm	50	65	80	100	150	200	250	300	350	400	450
L3	inch	11.0	13.0	14.5	18.0	24.0	30.0	36.0	41.0	44.0	49.0	55.0
	mm	279	330	368	457	610	762	914	1041	1118	1245	1397
L2	inch	17.87	20.25	23.0	26.88	36.5	40.87	50.88	56.88	-	-	-
	mm	454	514	584	683	927	1038	1292	1445	-	-	-
L1	inch	17.75	20.0	22.75	26.5	36.0	40.25	50.0	56.0	62.0	68.0	-
	mm	451	508	578	673	914	1022	1270	1422	1575	1727	-
H	inch	9.6	10.4	10.6	12.5	15.7	22.0	24.8	27.5	33.9	35.4	39.4
	mm	245	264	270	318	400	559	629	699	860	899	1000
WEIGHT	LB	187.4	260.2	341.8	628.4	1653.8	2976.8	4740.8	6615.0	9216.9	11157.3	16493.4
	Kg	85	118	155	285	750	1350	2150	3000	4180	5060	7480

MISCELLANEOUS SPECIFICATIONS

GASKET & PACKING MATERIALS

Following gasket & packing materials are standard.
Optional materials depending on service conditions, available upon request.

TYPE	GRAPHITE MATERIAL		P.T.F.E. MATERIAL	
	TYPE	PERFORMANCE	TYPE	PERFORMANCE
GASKET	CLASS 150 : CORRUGATED GRAPHITE	TEMP LIMITATION -20 TO 1086°F	CLASS 150 : P.T.F.E. SOLID GASKET	TEMP LIMITATION -148 TO 302°F
	CLASS 300~1500 : SPIRAL WOUND GRAPHITE WITH SS INNER RING	TEMP LIMITATION -454 TO 1598°F	CLASS 300~1500 : SPIRAL WOUND P.T.F.E. SOLID WITH SS INNER RING	TEMP LIMITATION -328 TO 500°F
PACKING	TOP AND BOTTOM WIPER RINGS OF CARBON FIBER INNER RINGS OF PURE GRAPHITE	TEMP LIMITATION -418 TO 932°F	BRAIDED P.T.F.E. FIBER	TEMP LIMITATION -58 TO 500°F

BONNET GASKET MATERIALS

Depending on class ratings and servicing conditions, following gasket materials are available for body/bonnet flange gaskets of KCL cast steel valves. Specify your gasket material in purchase order.

Gasket Material	Class					
	150	300	600	900	1500	2500
Corrugated metal	●	●				
Ring joint metal			●	●	●	●
Spiral wound metal, PTFE filled		●				
Flexible graphite	●					
Spiral wound metal, flexible graphite filled		●				
Stainless steel inserted flexible graphite	●					
Ceramics filled PTFE	●					
Compressed asbestos	●	●				
Sprial wound metal, asbestos filled		●				

Contact KCL Valve or your regional KCL Agencies for optional Requirements of Gasket or Gland Packing materials not listed above.

ENGINEERING DATA

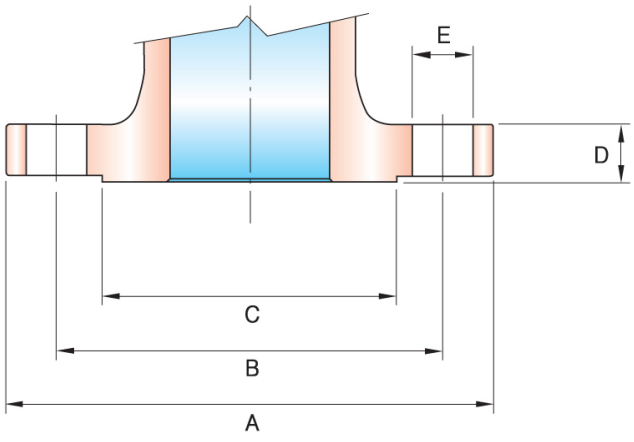

Steel Pipe Flange
ASME B16.5 CLASS 150

Unit : mm

Nominal size (in Inches)	A	B	C	D	E	Bolt	
						NUMBER	DIAM
1/2	88.9	60.5	35.1	11.2	15.8	4	1/2
3/4	98.6	69.9	42.9	12.7(11.2)	15.8	4	1/2
1	108.0	79.2	50.8	14.3(11.2)	15.8	4	1/2
1 1/2	127.0	98.9	73.2	17.6(14.3)	15.8	4	1/2
2	152.4	120.7	91.9	19.1(15.8)	19.1	4	5/8
2 1/2	177.8	139.7	104.6	22.4(17.6)	19.1	4	5/8
3	190.5	152.4	127.0	23.9(19.1)	19.1	4	5/8
4	228.6	190.5	157.2	23.9	19.1	8	5/8
5	254.0	215.9	185.7	23.9	22.4	8	3/4
6	279.4	241.3	215.9	25.4	22.4	8	3/4
8	342.9	298.5	269.7	28.5	22.4	8	3/4
10	406.4	362.0	323.9	30.3	25.4	12	7/8
12	482.6	431.8	381.0	31.8	25.4	12	7/8
14	553.4	476.3	412.8	35.1	28.4	12	1
16	596.9	539.8	469.9	36.6	28.4	16	1
18	635.0	577.9	533.4	39.7	31.8	16	1 1/8
20	698.5	635.0	584.2	43.0	31.8	20	1 1/8
24	812.8	749.3	692.2	47.8	35.1	20	1/4

Includes 1.6 raised face
Dimensions () are for valve flanges

ASME B16.5 CLASS 300

Unit : mm

Nominal size (in Inches)	A	B	C	D	E	Bolt	
						NUMBER	DIAM
1/2	95.3	66.5	35.1	14.3	15.8	4	1/2
3/4	117.3	82.6	42.9	15.8	19.1	4	5/8
1	124.0	88.9	50.8	17.6	19.1	4	5/8
1 1/2	155.4	114.3	73.0	20.6	22.4	4	3/4
2	165.1	127.0	91.9	22.4	19.1	8	5/8
2 1/2	190.5	149.4	104.6	25.4	22.4	8	3/4
3	209.6	168.1	127.0	28.5	22.4	8	3/4
4	254.0	200.2	157.2	31.8	22.4	8	3/4
5	279.4	235.0	185.7	35.1	22.4	8	3/4
6	317.5	269.7	215.9	36.6	22.4	12	3/4
8	381.0	330.2	269.7	41.2	25.4	12	7/8
10	444.5	387.4	323.9	47.8	28.4	16	1
12	520.7	450.9	381.0	50.8	31.8	16	1 1/8
14	584.2	514.4	412.8	53.9	31.8	20	1 1/8
16	647.7	571.5	469.9	57.2	35.1	20	1 1/4
18	711.2	628.7	533.4	60.5	35.1	24	1 1/4
20	774.7	685.8	584.2	63.5	35.1	24	1 1/4
24	914.4	812.8	692.2	69.9	41.2	24	1 1/2

includes 1.6 raised face

ASME B16.5 CLASS 600

Unit : mm

Nominal size (in Inches)	A	B	C	D	E	Bolt	
						NUMBER	DIAM
1/2	95.3	66.5	44.5	14.3	15.8	4	1/2
3/4	117.3	82.6	52.3	15.8	19.1	4	5/8
1	124.0	88.9	57.2	17.6	19.1	4	5/8
1 1/2	155.4	114.3	73.2	22.4	22.4	4	3/4
2	165.1	127.0	91.9	25.4	19.1	8	5/8
2 1/2	190.5	149.4	104.6	28.5	22.4	8	3/4
3	209.6	168.1	127.0	31.8	22.4	8	3/4
4	273.1	215.9	157.2	38.1	25.1	8	7/8
5	330.2	266.7	185.7	44.5	28.4	8	1
6	355.6	292.1	215.9	47.8	28.4	12	1
8	419.1	349.3	269.7	55.7	31.8	12	1 1/8
10	508.0	431.8	323.9	63.5	35.1	16	1 1/4
12	558.8	489.0	381.0	66.6	35.1	20	1 1/4
14	603.3	527.1	412.8	69.9	38.1	20	1 3/8
16	685.8	603.3	469.9	76.2	41.2	20	1 1/2
18	743.0	654.1	533.4	82.6	44.5	20	1 5/8
20	812.8	723.9	584.2	88.9	44.5	24	1 5/8
24	939.8	838.2	692.2	101.6	50.8	24	1 7/8

6.4 raised face not included

ASME B16.5 CLASS 900

Unit : mm

Nominal size (in Inches)	A	B	C	D	E	Bolt	
						NUMBER	DIAM
1/2	120.7	82.6	44.5	22.4	22.4	4	3/4
3/4	130.0	88.9	52.3	25.4	22.4	4	3/4
1	149.4	101.6	57.2	28.5	25.4	4	7/8
1 1/2	177.8	124.0	73.2	31.8	28.4	4	1
2	215.9	165.1	91.9	38.1	25.4	8	7/8
2 1/2	244.3	190.5	104.6	41.2	28.4	8	1
3	241.3	190.5	127.0	38.1	25.4	8	7/8
4	292.1	235.0	157.2	44.5	31.8	8	1 1/8
5	349.0	279.4	185.7	50.8	35.1	8	1 1/8
6	381.0	317.5	215.9	55.7	31.8	12	1 1/4
8	469.9	393.7	269.7	63.5	38.1	12	1 1/8
10	546.1	469.9	323.9	69.9	38.1	16	1 3/8
12	609.6	533.4	381.0	79.3	38.1	20	1 3/8
14	641.4	558.8	412.8	85.9	41.2	20	1 1/2
16	704.9	616.0	469.9	89.9	44.5	20	1 5/8
18	787.4	685.8	533.4	101.6	50.8	20	1 7/8
20	857.3	749.3	584.2	108.0	53.9	20	2
24	1041.4	901.7	692.2	139.7	66.6	20	2 1/2

6.4 raised face not included

ASME B16.5 CLASS 1500

Unit : mm

Nominal size (in Inches)	A	B	C	D	E	Bolt	
						NUMBER	DIAM
1/2	120.7	82.6	44.5	22.4	22.4	4	3/4
3/4	130.3	88.9	52.3	25.4	22.4	4	3/4
1	149.4	101.6	57.2	28.5	25.4	4	7/8
1 1/2	177.8	124.0	73.2	31.8	28.4	4	1
2	215.9	165.1	91.9	38.1	25.4	8	7/8
2 1/2	244.3	190.5	104.6	41.2	28.4	8	1
3	266.7	203.2	127.0	47.8	31.8	8	1 1/8
4	311.2	241.3	157.2	53.8	34.9	8	1 1/4
5	374.7	292.1	185.7	73.2	41.3	8	1 1/2
6	393.7	317.5	215.9	82.6	38.1	12	1 3/8
8	482.6	393.7	269.7	91.9	44.5	12	1 5/8
10	584.2	482.6	323.9	108.0	50.8	12	1 7/8
12	673.1	571.5	381.0	124.0	54.0	16	2
14	749.3	635.0	412.8	133.4	60.3	16	2 1/4
16	825.5	704.9	469.9	146.1	66.7	16	2 1/2
18	914.4	774.7	533.4	162.1	73.0	16	2 3/4
20	984.3	831.9	584.2	177.8	79.4	16	3
24	1168.4	990.5	692.0	203.2	92.1	16	3 1/2

6.4 raised face not included